Iranian Journal of Oil & Gas Science and Technology, Vol. 2 (2013), No. 1, pp. 33-41
http://ijogst.put.ac.ir

A New Method of Earlier Kick Assessment Using ANFIS

F. Deregeh[1,2], M. Karimian[2,3*], and H. Nezamabadi-Pour[4,5]

[1] Iranian Research Organization for Science and Technology (IROST), Iran
[2] Society of Young Researchers, Shahid Bahonar University of Kerman, Iran
[3] Department of Petroleum Engineering, Shahid Bahonar University of Kerman, Iran
[4] Department of Electrical Engineering, Shahid Bahonar University of Kerman, Iran
[5] Energy and Environmental Engineering Research Centre (EERC), Shahid Bahonar University of Kerman, Iran

Abstract

The late detection of the kick (the entrance of underground fluids into oil wells) leads to oil well blowouts. It causes human life loss and imposes a great deal of expenses on the petroleum industry. This paper presents the application of adaptive neuro-fuzzy inference system designed for an earlier kick detection using measurable drilling parameters. In order to generate the initial fuzzy inference system, subtractive clustering is utilized. The training set contains 50 data samples and there are 362 data samples for testing the proposed method. Also, ANFIS structure is examined at different radii (the parameter of subtractive clustering). Different conformations are tested to get the earliest detection and the lowest false alarms while facing kick. Eventually, ANFIS verifies the danger exposure depth of about 28.6 meters before the depth that the kick was sensed by crew. Such an assessment gives the rig crew enough time to prepare for the danger and stop the operation before being exposed to high pressure zones.

Keywords: Kick, Fuzzy Inference System (FIS), ANFIS, Subtractive Clustering, Time Series

1. Introduction

1.1. What is the kick?

Kick is defined as the flow of underground formation fluids into an oil well in the presence of drilling fluid (Bourgoyne et al., 1991). If the kick could not be detected at the right time and subsequently the well control systems fail to prevent the flow of formation fluids, a blowout is inevitable.

Conventionally, spotting kick during drilling operations is accomplished by means of mud pit volume indicator. It is a flow indicator which detects changes in the total volume of the mud reservoirs. In case of kick occurrence, total fluid volume increases. It could be indexed by the flow indicator. There are some other kick indicators such as increases in drilling rate, increases in torque and drag, changes in cutting size and shape, temperature measurements, increasing gas volume level, and d-exponent (Kamyab et al., 2010).

Traditional methods of kick detection based on the mentioned parameters are not quite trustworthy. The first reason is the fluctuations in readings during measurement due to the dynamic nature of the drilling operation. Crew had to increase the alarm threshold in order to reduce the false alarm rates while drilling in different rock types (Nas, 2011). On the other hand, the diversity of parameters and issues, which need to be considered during drilling, may distract the driller attention until the danger

* Corresponding Author:
Email: m.karimian@eng.uk.ac.ir

reaches the critical margins (Wylie and Visram, 1990).
Literature studies reveal series of researches concerning kick detection; some investigators developed methods which needed extra detectors being installed on the oil rig (Bang et al., 1994); examples are gas kick warner (GKW) introduced by Stokka et al. (Stokka et al., 1993), which measures the propagation time of pressure pulse travelling through the mud system in the well or the system developed by Li et al. (Li et al., 1998) which calculates the propagation of acoustic waves and the flow rate of waves through drilling fluid. These methods are not quite suitable because they only work when kick is in the form of a free gas column and they are not able to detect kick where formation fluid density is near the mud density (e.g. in salt water) or when gas is dispersed in mud (Grace, 1994). Therefore, it seems that the best method uses existing measurements and parameters to assess the margins of kick occurrence.

1.2. ANFIS

The architecture of ANFIS's uses the approaches of both artificial neural network and fuzzy inference system. ANFIS consists of if-then rules and couples of input-output. The learning algorithms of neural network is used for ANFIS training. ANFIS was introduced by Jang (Jang J. S., 1993) which was suitable for TSK type of FIS proposed by Takagi and Sugeno (Takagi and Sugeno, 1985) and Sugeno and Kang (Sugeno and Kang, 1998). The modeling and control techniques of ANFIS are clarified elsewhere (Jang J. S., 1993; Jang and Sun, 1993; Jang et al.,1997; Jang and Gulley, 1995). Several applications are also presented in other works (Studer and Masulli, 1996; Sugeno and Kang, 1998; Takagi and Sugeno, 1983). In addition, too many applications are presented with ANFIS for time series prediction (Sfetsos, 2000; Kasabov and Song, 2002; Jang and Sun, 1993; Keskin et al., 2006; Yang and Meng, 2005).
It is assumed that each input has two membership functions *A1* and *A2* and *B1* and *B2* respectively (Jang et al., 1997). Then, a first-order TSK type of fuzzy if-then rule could be determined as:

Rule *i*: IF x **is** A **and** y **is** B **then** $f_i = p_i x + q_i y + r_i$ ***i = 1, 2, …, n*** (1)

where, f_i are the outputs within the fuzzy region specified by the fuzzy rule i; n stands for the number of rules and p_i, q_i, and r_i are the design parameters that are determined during the training procedure. As shown in Figure 1, the formation of ANFIS is designed by using five layers and nine if-then rules.

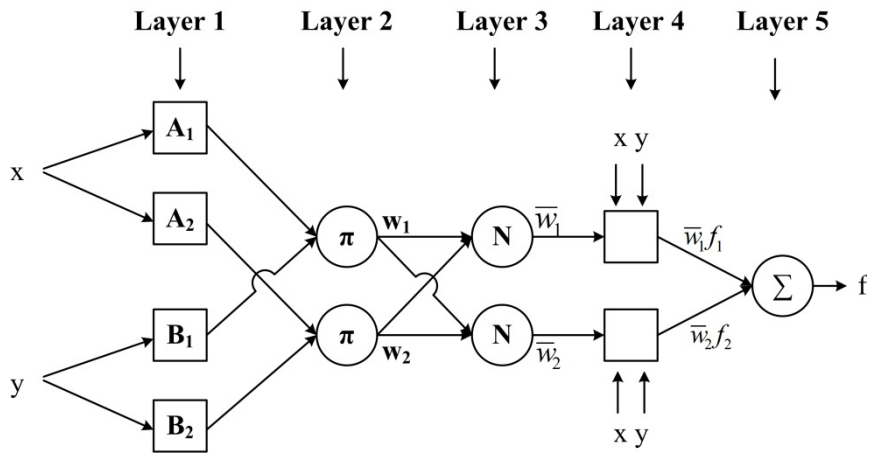

Figure 1
Structure of ANFIS model

Layer-1: calculating the fuzzy membership extent ($\mu_{A_i}(.)$) of the inputs as given below:

$$o_i^1 = \mu_{A_i}(x) \qquad i=1, 2, \ldots, n \tag{2}$$

$$o_i^1 = \mu_{B_i}(y) \qquad i=1, 2, \ldots, n \tag{3}$$

Layer-2: weight functions (w_i) are the outputs of the subsequent layer. This layer does the product operation. The outputs o_i^2 of this layer can be calculated as:

$$o_i^2 = w_i = \mu_{A_i}(x)\mu_{B_i}(y) \qquad i=1, 2, \ldots, n \tag{4}$$

Layer-3: The outputs (o_i^3) could be obtained after normalizing in this layer as reads:

$$o_i^3 = \overline{w}_i = \frac{w_i}{\sum_{i=1}^{n} w_i} \qquad i=1, 2, \ldots, n \tag{5}$$

Layer-4: This layer is the defuzzification layer. The nodes in this layer are adaptive nodes. The relationship between input and output in this layer can be represented as below:

$$o_i^4 = w_i\left(p_i x + q_i y + r_i\right) \qquad i=1, 2, \ldots, n \tag{6}$$

The output of layer 4 is shown by o_i^4 and the constant parameters of the node are p_i, q_i, and r_i.

Layer-5: The layer is an output layer. This node carries out the sum of inputs of all the layers, which stands for the outcomes of learning rates. The overall output of the structure is obtained by:

$$o_i^5 = \sum_{i=1}^{n} \overline{w}_i \qquad i=1, 2, \ldots, n \tag{7}$$

where, o_i^5 is the output of the fifth layer and the final output of the system.

2. Methodology and implementation

2.1. Preparing input data (kick detection via d-exponent)

Whereas d-exponent merges four parameters into a single one that brings out more precise indication, it is chosen as a kick indicator among those listed earlier. In 1966, Jordan and Shirley (Jordan and Shirley, 1966) developed a normalized penetration rate calculation from the data gathered in the Gulf of Mexico as follows:

$$d_{\text{exponent}\,0} = \frac{\log\left(\dfrac{ROP}{60 \times RPM}\right)}{\log\left(\dfrac{12 \times WOB}{1000 \times d_b}\right)} \tag{8}$$

where, *ROP* is the rate of penetration (*ft/hr*); *RPM* represents the revolution of drill string per minute (rpm), *WOB* stands for weight on bit (*lbs*) and d_b is hole diameter (in). All of these four parameters are easily accessible during drilling (Whitman and Evers, 1987).

The application of d-exponent concept in the detection of abnormal pressure zone is being verified by some investigators (Fertl and Chilingariana, 1987; Havrevold et al., 1991; Fertl and Timko, 1971; Tangen and Baleix, 1992; Rehm and McClendon, 1971); Chikao (Chikao et al., 1996) studied

abnormal pressure detection in North and South America via d-exponent. Herbert and Young (Hebert and Young, 1972) estimated the formation pressure via the regression of drilling data like d-exponents. Pikington (Pikington, 1988) also utilized d-exponent in his study for overpressure zone detection. Griffin and Bazer (Griffin and Bazer, 1969) made a comparison between the methods of abnormal pressure detection, which confirmed the viability of d-exponent.

Figure 2 shows a data sample obtained from one of the Iranian oil wells which experienced kick at a depth of 1844 meters. As it can be seen from Figure 2, series shows a lot of minor fluctuations that can impose some difficulties during the model implementation. To overcome the problem, the logarithm of d-exponent has been normalized within the closed interval of [0, 1] (Figure 3).

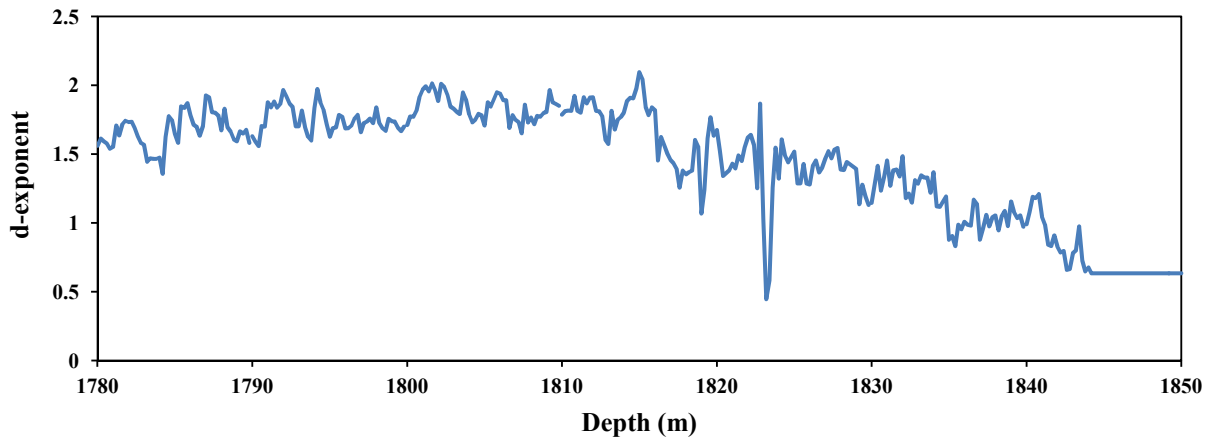

Figure 2
Traditional d-exponent versus depth

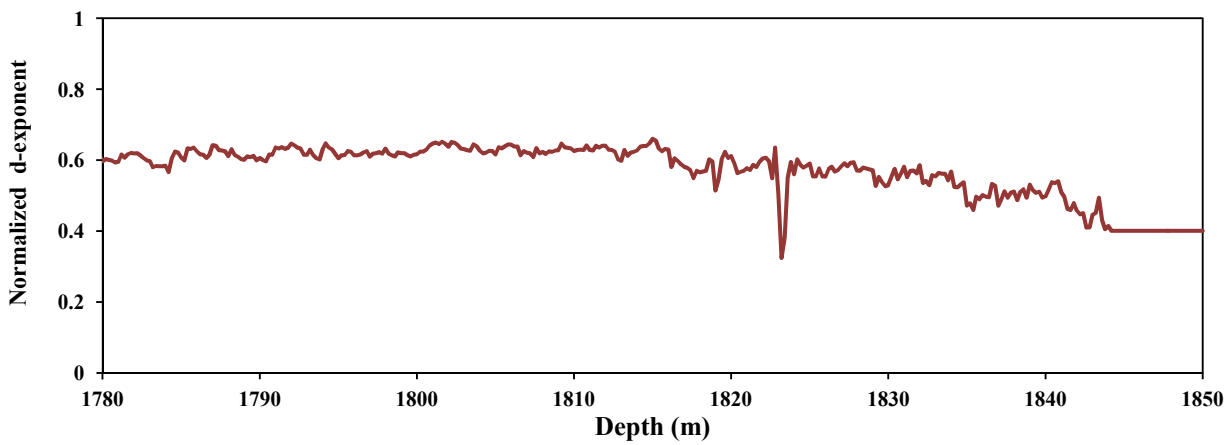

Figure 3
Normalized logarithm of d-exponent

2.2. Development of a neuro-fuzzy system for kick detection

In this paper, 412 data in one set of input data are used. The data set was divided into two sets, namely the training data set (50 data points) and the testing data set (362 data points, 87% of all of the data). The purpose of the training step is to minimize the error between real target and ANFIS output through a training process. This provides ANFIS with the ability to learn attributes from the observed training data and implement them in the fuzzy rules. In the testing phase, another data set (test data), which is different from the training set, is fed to the learned system for evaluation. The subtractive clustering (SC) method is utilized to formulate the ANFIS. The subtractive clustering technique

assumes that each data point is a possible cluster center and computes a measure of the likelihood that each data point will define the cluster center. The measure of the likelihood is calculated on the basis of the density of the surrounding data points. The flowchart of SC-ANFIS is illustrated in Figure 4 and the pseudo code of the subtractive clustering is displayed in Figure 5. The ANFIS model was implemented in MATLAB™ software (MathWorks, R2009b); the pseudo code of algorithm is represented in Figure 6.

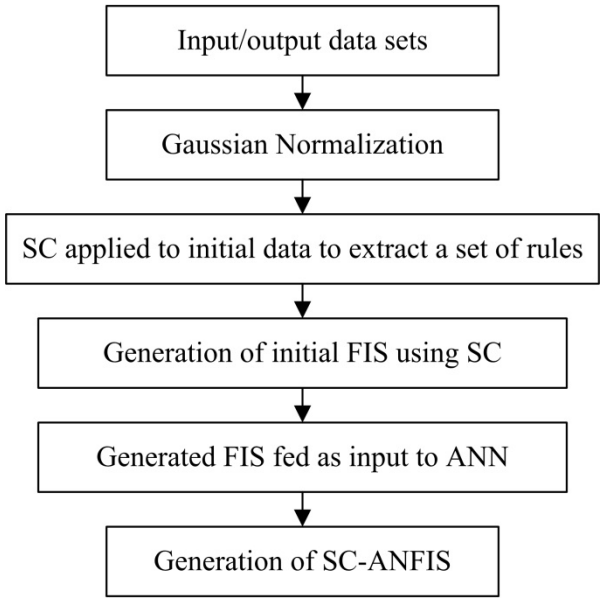

Figure 4
Flowchart of SC-ANFIS

- Selects the data point with the highest potential to be the first cluster center
- Removes all data points in the vicinity of the first cluster center (as determined by radii) in order to determine the next data cluster and its center location
- Iterates on this process until all of the data are within the radii of a cluster center

Figure 5
Pseudo code of subtractive clustering

Step1: Given *n* candidate inputs, a subset of "*k*" inputs is selected as an input to the ANFIS for training.
Step 2: Normalized train and test data.
Step 3: The ANFIS model is constructed.
Step 4: ANFIS model is trained by training data.
Step 5: Evaluation with test data.

Figure 6
Pseudo code of the proposed algorithm

3. Results and discussion

The main goal of this work is the earlier and accurate detection of the kick. Proper cluster radii for obtaining the best results are set in order to achieve:

- Earlier kick detection;
- The lowest false alarm rate.

In the current study, depth was used as an input and d-exponent was selected as the output of the ANFIS. We used the proposed method to learn the input-output relations according to the training data set. In the learning step, the ANFIS first provides the appropriate membership function of each input. Afterwards, the membership functions are adjusted according to error correction training method by applying BP algorithm. In addition, the constant parameter of the linear output functions is tuned during the learning phase on the basis of recursive least square (RLS) algorithm.

The relative mean absolute error (RMAE) between the measured ($Y(pi)$) and the estimated depth ($Y(oi)$) of kick occurrence was used to evaluate the performance of ANFIS. The RMAE is defined as:

$$RMAE = \left(\frac{1}{n} \sum_{i=1}^{n} \frac{\left| Y(pi) - Y(oi) \right|}{Y(oi)} \right) \times 100 \tag{9}$$

Figure 7 shows the predicted data obtained by ANFIS. From this figure, one can see that there is an optimum value of radius at which the lowest false alarms along with a clear margin of danger is achieved. Table 1 also reveals the more detailed view of different results with various radii for ANFIS. It is obvious that the optimized ANFIS (at a radius of 0.95) verifies the danger exposure depth of 1815.6 m, which is far better than what was sensed by crew (1844.2 m). The difference between these two values, which is 28.6 m, can efficiently help to prevent kick from entering the well and allows the crew to perform counter-measures to minimize or eliminate the risk of blowout.

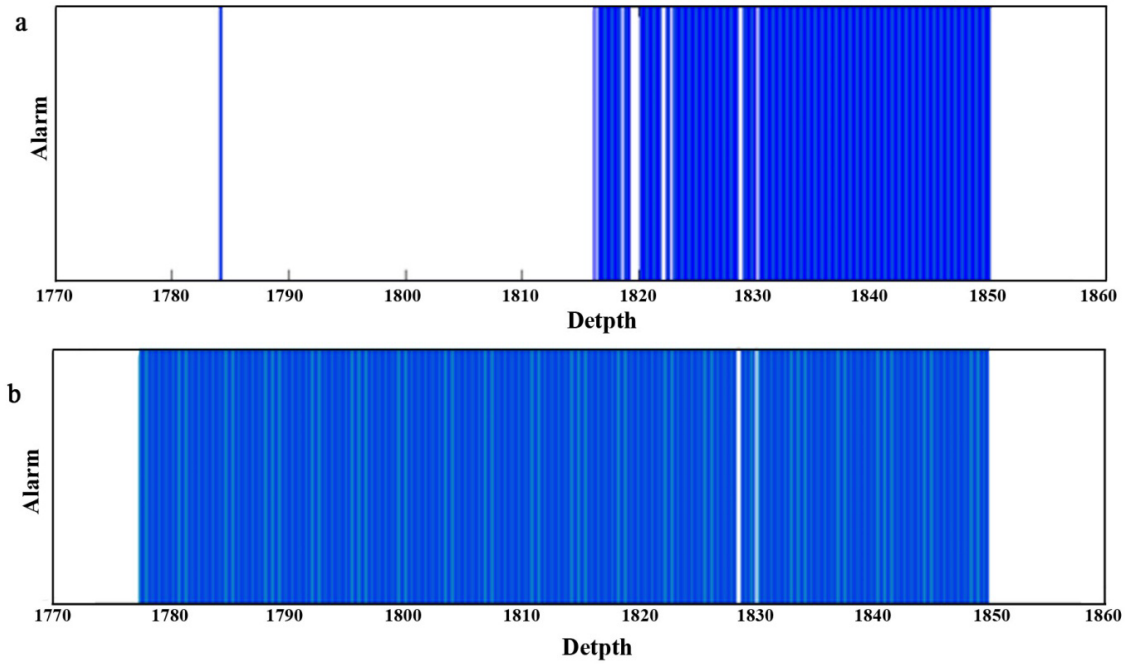

Figure 7
Alarm rates results for different configurations; (a) radius=0.95; (b) radius=0.50.

Table 1
Different results of ANFIS for various radii

radii	train MSE (%)	train RMAE (%)	test MSE (%)	test RMAE (%)	False alarm rate after forecasting depth of kick	Depth of detection
0.5	2.9381×10^{-4}	2.2760	28.9112	864.1194	346	1772
0.8	4.3836×10^{-4}	2.8912	0.0308	26.8733	235	1795
0.95	4.7067×10^{-4}	3.0314	0.0131	15.9753	146	1815.6

In ordinary fuzzy inference systems, the optimum membership functions are chosen by trial and error. Moreover, the fuzzy rule structure is set beforehand by an expert person. Due to restricted knowledge of the experts from system in practice**,** these models may not perform satisfactorily and an unsuitable selection of membership parameters may be made (Jang, 1993). In the suggested ANFIS-based methodology, the parameters are automatically adjusted during the learning phase; therefore, the membership functions can suitably represent the nonlinear behavior of the system with optimal efficiency.

In order to propose a method which can be used worldwide, it is favorable to use a global parameter as the time series input of ANFIS. To this end, using d-exponent is a good idea. It is a widely accepted drilling parameter and does not depend on a specific location or formation. Additionally, the assessment of kick by a real-time drilling time series helps this method to be applied globally and not locally, because every well is trained and tested by its own data and not by predetermined values from other wells.

It should be noted that the implementation of real-time data gathering ANFIS along with drilling operation enables the supervisor to exclude time series data during make-break or other planned stops of drilling within an integrated ANFIS-MWD window in driller monitor. This allows real-time kick detector to assess kick earlier than old methods and prevent the drilling system from further exposure to danger.

4. Conclusions

A new application of ANFIS to early-time kick detection was presented for the first time in kick detection researches. ANFIS models are powerful tools for building complex nonlinear relationships between inputs and outputs by learning from a data set. The results of ANFIS demonstrate that the accuracy of the ANFIS model is generally very high. ANFIS model presented a very powerful tool to study risk analysis especially kick detection in drilling engineering. It should be noted that detection is recorded when the concentration of alarms in 1- to 2-meter periods rises and does not decrease in the next 2 to 3 meters. The reason for this is either the nature of the subsurface layers of the earth which can suddenly cause a change in d-exponent (by increasing ROP) or sometimes an inaccurate procedure by drilling crew (sudden change in WOB). Thus the system should be tolerant to such disturbances.

This method does not depend on specific well location and can be used worldwide for two reasons. First, a well-known drilling parameter (d-exponent) is selected which does not depend on a specific location or formation. The second reason comes from ANFIS structure and properties which train and test the system by using its own available data and not by predetermined values from other wells. It is noteworthy that the success of the proposed method is guaranteed by feeding ANFIS with reliable real-time MWD data. Fortunately, many rigs are today equipped with MWS units; hence, the only problem is excluding the make/break periods and other programmed special operations (like reaming, etc.) from MWD data. This can easily be done by dedicating a section to ANFIS-MWD in supervisors and/or drillers monitor.

Nomenclatures

ANFIS	: Adaptive neuro-fuzzy inference system
FIS	: Fuzzy inference system
GKW	: Gas kick warner
TSK	: A type of FIS proposed by Takagi, Sugeno and Kang
f_i	: Outputs of the membership function
o_i^n	: Outputs of layer n
w_i	: Weight functions
ROP	: Rate of penetration (*ft/hr*)
RPM	: Revolution of drill string per minute (rpm)
WOB	: Weight on bit (*lbs*)
d_b	: Hole diameter (in)
MWD	: Measurement while drilling
SC-ANFIS	: Subtractive clustering adaptive neuro-fuzzy inference system
RMAE	: Relative means absolute error
RLS	: Recursive least square
BP algorithm	: Back propagation algorithm
MSE	: Mean square error

References

Bang, J., Svein, S. A., Hendriks, P., and Jensen, L., Acoustic Gas Kick Detection with Wellhead Sonar, SPE Annual Technical Conference and Exhibition, New Orleans, Louisiana, US., 1994

Bourgoyne, A. T., Millheim, K. K., Chenevert, M., and F. S., Y., Applied Drilling Engineering (2nd Edition Ed.). Richardson, TX, SPE Textbook Series, Society of Petroleum Engineering, 1991

De Campos, L., and Moral, S., Learning Rules for a Fuzzy Inference Model, Fuzzy Sets and Systems, Vol. 3 No. 59, p. 247-257, 1993

Fertl, W. and Chilingariana, G., Abnormal Formation Pressures and Their Detection by Pulsed Neutron Capture logs, Journal of Petroleum Science and Engineering, Vol. 1 No. 1, p. 23-38, 1987

Grace, R. Advanced Blowout and Well Control, Gulf Publishing Company, Houston, Texas, 1994

Griffin, D. and Bazer, D., A Comparison of Methods for Calculating Pore Pressures and Fracture Gradients from Shale Density Measurements Using the Computer, Journal of Petroleum Technology, Vol. 21 No. 11, p. 1463-1474, 1969

Hebert, W. and Young, F., Estimation of Formation Pressure with Regression Models of Drilling Data. Journal of Petroleum Technology, Vol. 24 No. 1, p. 9-15, 1972

Jang, J., ANFIS: Adaptive-network-based Fuzzy Inference System, IEEE Trans Syst Man Cyber, Vol. 23, No. 3, p. 665-685, 1993

Jang, J. and Gulley, N., The Fuzzy Logic Toolbox for Use with MATLAB, New York, The Mathworks, Inc., p. 69-78, 1995

Jang, J. and Sun, C., Neuro-fuzzy Modeling and Control, Proceedings of the IEEE, Vol. 3, No. l 83, p. 378-406, 1993

Jang, J., Sun, C., and Mizutani, E., Neuro-fuzzy and Soft Computing: A Computational Approach to Learning and Machine Intelligence, Englewood Cliffs, NJ, USA, Prentice-Hall, 1997

Jang, J. S. and Sun, C. T., Predicting Chaotic Time Series with Fuzzy If-then Rules, Fuzzy Systems, Second IEEE International Conference, San Francisco, CA, USA, 1993

Jordan, J. and Shirley, O., Application of Drilling Performance Data to Overpressure Detection. J. Pet. Tech., p. 1387-1399, 1966

Kamyab, M., Shadizadeh, S., Jazayeri-rad, H., and Dinarvand, N., Early Kick Detection Using Real-time Data Analysis with Dynamic Neural Network, Nigeria Annual International Conference and Exhibition. Tinapa-Calabar, Nigeria, 2010

Kasabov, N. and Song, Q., DENFIS: Dynamic Evolving Neural-fuzzy Inference System and its Application for Time-series Prediction. Fuzzy Systems, IEEE Transactions on, p. 144-154, 2002

Keskin, M., Taylan, D. and Terzi, O., Adaptive Neural-based Fuzzy Inference System (ANFIS) Approach for Modelling Hydrological Time Series. Hydrological Sciense Journal-Journal DES Sciense Hydrologiques, Vol. 51, No. 4, p. 588-598, 2006

Li, X., Guan, C., Sui, X., and Gangtao., A New Approach for Early Gas Kick Detection. SPE International Conference and Exhibition, Beijing, China, 1998

Nas, S., Kick Detection and Well Control in a Closed Wellbore, IADC/SPE Managed Pressure Drilling and Underbalanced Operations Conference and Exhibition, Dnver, Colorado, USA., 2011

Pikington, P., Uses of Pressure and Temperature Data in Exploration and Now Developments in Overpressure Detection, Journal of Petroleum Technology, Vol. 40, No. 5, p. 543-549, 1988

Rehm, B. and McClendon, R., Measurement of Formation Pressure from Drilling Data, Fall Meeting of the Society of Petroleum Engineers of AIME, New Orleans, Louisiana, 1971

Sfetsos, A., A Comparison of Various Forecasting Techniques Applied to Mean Hourly Wind Speed Time Series, Renewable Energy, Vol. 21, No. 1, p. 23-35, 2000

Stokka, S., Andersen, J., Freyer, J., and Welde, J., Gas Kick Warner: An Early Gas Influx Detection Method. SPE/IADC Drilling Conference. Amsterdam, Netherlands, 1993

Studer, L. and Masulli, F., On The Structure Of A Neuro-fuzzy System To Forecast Chaotic Time Series, International Symposium on Neuro-fuzzy Systems, p. 103-110, 1996

Sugeno, M., and Kang, G., Structure Identification of Fuzzy Models. Fuzzy Sets Syst, Vol. 28, No. 15, p. 15-33, 1998

Takagi, T. and Sugeno, M., Derivation of Fuzzy Control Rules from Human Operator's Control Actions. Proceedings of the IFAC Symposium on Fuzzy Information, Knowledge Representation and Decision Analysis, p. 55-60, 1983

Takagi, T. and Sugeno, M., Fuzzy Identification of Systems and Its Applications to Modeling and Control. Trans Syst Man Cyber, Vol. 5, No. 1, p. 116-132, 1985

Tangen, K. and Baleix, J., Application of a Pressure Analysis Expert System During Exploration Drilling. European Petroleum Conference. Cannes, France, 1992

Whitman, D., and Evers, J., Demonstration and Teaching of Kick Control Techniques Using Microcomputer Graphics. Petroleum Industry Application of Microcomputers. Lake Conroe, Texas, 1987

Wylie, W. W., and Visram, A. S., Drilling Kick Statistics. IADC/SPE Drilling Confarene. Houston, Texas, 1990

Yang Gao, M. J., NARMAX Time Series Model Prediction: Feedforward and Recurrent Fuzzy Neural Network Approaches, Fuzzy Sets and Systems, Vol. 150, No. 2, p. 331-350, 2005

Fuzzy logic Toolbox User's Guide, for Use of the Matlab, Retrieved from MathWorks: http://www.mathworks.com/, 2004